HDR-131992-XX-HQDP

REVISION

D	JB	D BERNARDI
10/7/2008	ECN-98484	

SHT 1 - DRAWING VIEWS: CHG DIM FROM ""L1" ± .05[1.3]" TO ""L1" ± 1%"; SHT 1 - NOTES: ADD "C3" CRITICAL TO NOTE 5, REMOVE "& LINE NUMBER "-XX"" TEXT FROM NOTE 6, CHG NOTE 8 FROM "PARTS TO BE PACKAGED IN....." TO "FOR PACKAGING STANDARDS REFERENCE.....".

E	DB	D BERNARDI
3/10/2009	ECN-106837	

ADD 04, 05, 06, AND 07 VERSION. UPDATE NOTE #8 TO SAY "FOR SUB-ASSEMBLY AND FINISHED GOOD PACKAGING REQUIREMENTS, REFERENCE PACKAGING STANDARD CO-HD-WI-3033-M."

HDR SETUP OPTION:
HQDP-3 BANK
PCB SETUP OPTION:
OPTION 4

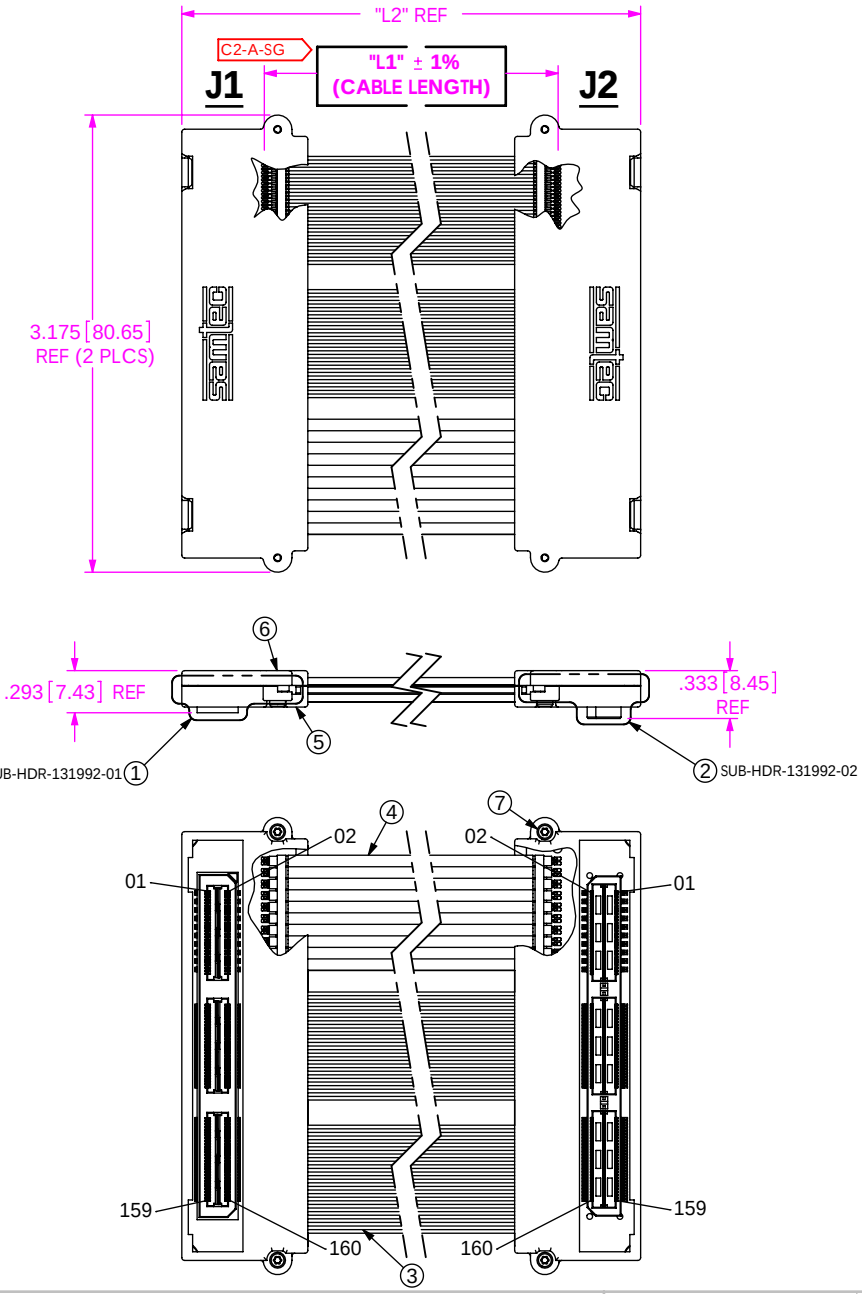

THIS PRODUCT MANUFACTURED WITH LEAD-FREE PROCESSING

TABLE 2		
PART #	"L1"	"L2"
HDR-131992-01-HQDP	6.00[152.4]	6.95[176.4]
HDR-131992-02-HQDP	12.00[304.8]	12.95[328.8]
HDR-131992-03-HQDP	18.00[457.2]	18.95[481.2]
HDR-131992-04-HQDP	3.75[95.25]	4.70[119.3]
HDR-131992-05-HQDP	24.00[609.6]	24.95[633.7]
HDR-131992-06-HQDP	30.00[762.0]	30.95[786.1]
HDR-131992-07-HQDP	78.74[1999.9]	79.69[2024.1]

NOTES:

1. **PCB'S, CONNECTORS, & CONFIGURATION ARE NON-STANDARD. LIKE PART #: HQDP-060-XX.XX-SBR-TBL-1**
2. XX-XX-XX REPRESENTS A CRITICAL DIMENSION.
3. PARTS TO BE PROCESSED PER SAMTEC ACCEPTABILITY REQUIREMENTS: HDR-PI-01 "CABLE ASSEMBLY WORKMANSHIP STANDARDS".
4. ALL ASSEMBLIES TO BE 100% ELECTRICALLY TESTED. C1-D-ET
5. ALL ASSEMBLIES TO BE 100% HI-POT TESTED AT 300V. C3-A-SG
6. ITEM 8 TO BE CENTERED ON ITEM 3 AS SHOWN. ITEM 8 TO CONTAIN: LINE 1 - PART NUMBER "HDR-XXXXX-XX", LINE 2 - SHOP ORDER NUMBER "XXXXXX", AND LINE 3 - DATE CODE "XXXX". NUMERIC REVISION PRODUCT WILL HAVE ADDITIONAL LABEL INDICATING "RELEASE FOR LIMITED PRODUCTION".
7. FOR PROCESSING INFORMATION ON SUB-ASSEMBLIES, REFERENCE SUB-HDR-131992-XX TRAVELER.XLS.
8. FOR SUB-ASSEMBLY AND FINISHED GOOD PACKAGING REQUIREMENTS, REFERENCE PACKAGING STANDARD CO-HD-WI-3033-M. E
9. TIGHTEN STS-01 FASTENERS TO 1.4-1.7 IN-LBS (4 PLCS).
10. PANEL PCB-100841-HDR-XX YIELDS (10) PCB-100841-HDR-01 BOARDS. PANEL PCB-100842-HDR-XX YIELDS (10) PCB-100841-HDR-02 BOARDS.

☐ ACCEPTANCE OF DRAWING
☐ ACCEPTED WITH DEVIATIONS LISTED

DATE:
COMPANY:
CUSTOMER SIGNATURE
PRINTED NAME
PHONE No:
FAX No:

HDR-131992-XX-HQDP BOM				
ITEM NO.	PART NUMBER	DESCRIPTION	QUANTITY	MATERIAL
1	SUB-HDR-131992-01	SUB ASSEMBLY	1	SUB ASSEMBLY
2	SUB-HDR-131992-02	SUB ASSEMBLY	1	SUB ASSEMBLY
3	SUB-TCF-3850-30-01-XX.XX	COAX CABLE	4	SUB ASSEMBLY
4	SUB-TTF-30100-10-01-XX.XX	TWIN-AX CABLE	2	SUB ASSEMBLY
5	HQDP-03-01	HOUSING	2	IDEMITSU XAREC EA 522 BK, COLOR: BLACK
6	HQDP-03-02	HOUSING	2	IDEMITSU XAREC EA 522 BK, COLOR: BLACK
7	STS-01	FASTENER	4	LOW CARBON STEEL
8	HDRL-11	LABEL	1	SELF LAMINATING VINYL

TOLERANCES DO NOT APPLY TO REFERENCE DIMENSIONS.
UNLESS OTHERWISE SPECIFIED, DIMENSIONS ARE IN INCHES.
TOLERANCES ARE:
DECIMALS: .XX: ±.01[.3] .XXX: ±.005[.13] .XXXX: ±.0020[.051]
ANGLES: 2°

PROPRIETARY NOTE
THIS DOCUMENT CONTAINS INFORMATION CONFIDENTIAL AND PROPRIETARY TO SAMTEC, INC. AND SHALL NOT BE REPRODUCED OR TRANSFERRED TO OTHER DOCUMENTS OR DISCLOSED TO OTHERS OR USED FOR ANY PURPOSE OTHER THAN THAT WHICH IT WAS OBTAINED WITHOUT THE EXPRESSED WRITTEN CONSENT OF SAMTEC, INC.

DO NOT SCALE DRAWING
SHEET SCALE: 3:4

F:\DWG\HDR\131000\HDR-131992-XX-HQDP\HDR-131992-XX-HQDP.SLDDRW

samtec
520 PARK EAST BLVD, NEW ALBANY, IN 47150
PHONE: 812-944-6733 FAX: 812-948-5047
e-Mail: info@SAMTEC.com code: 55322

DESCRIPTION: CUSTOM HDR CABLE ASSEMBLY

DWG. NO. HDR-131992-XX-HQDP

BY: J. BORGELT 4/6/07 SHEET 1 OF 3

THIS PRODUCT MANUFACTURED WITH LEAD-FREE PROCESSING

J1
SUB-HDR-131992-01

HDR SETUP OPTION:
SUB-XQCD-01-3 BANK
PCB SETUP OPTION:
OPTION 4

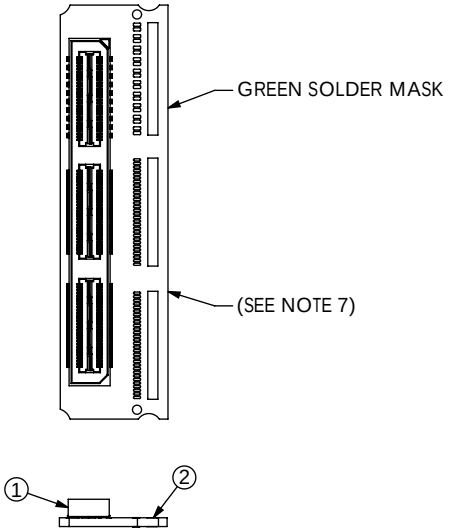

SUB-HDR-131992-01 BOM			
ITEM NO.	PART NUMBER	QUANTITY	MATERIAL
1	ASP-122953-01	1	SOCKET
2	PCB-100842-HDR-01	1	PCB
3	PT-1-24-03-29	.12500	TUBE
4	TP-07	.25000	PLUG

THIS PRODUCT MANUFACTURED WITH LEAD-FREE PROCESSING

J2
SUB-HDR-131992-02

HDR SETUP OPTION:
SUB-XQCD-01-3 BANK
PCB SETUP OPTION:
OPTION 4

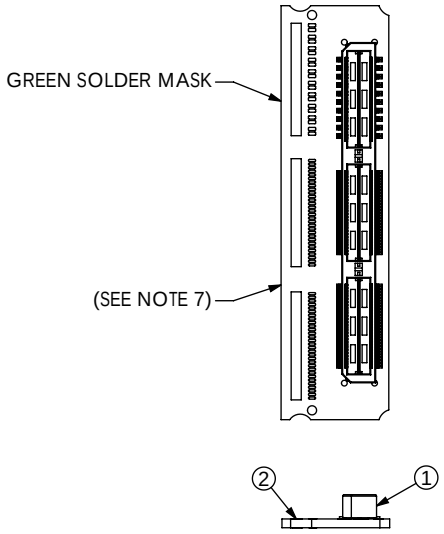

SUB-HDR-131992-02 BOM			
ITEM NO.	PART NUMBER	QUANTITY	MATERIAL
1	ASP-122952-01	1	SOCKET
2	PCB-100841-HDR-01	1	PCB
3	PT-1-24-03-29	.12500	TUBE
4	TP-07	.25000	PLUG

TABLE 1 SIGNAL MAPPING																	
J1	SIG	J2		J1	SIG	J2		J1	SIG	J2		J1	SIG	J2		J1	SIG	J2
1	SIG	1		55	SIG	55		109	SIG	109								
2	SIG	2		56	SIG	56		110	SIG	110								
3	SIG	3		57	SIG	57		111	SIG	111								
4	SIG	4		58	SIG	58		112	SIG	112								
5	SIG	5		59	SIG	59		113	SIG	113								
6	SIG	6		60	SIG	60		114	SIG	114								
7	SIG	7		61	SIG	61		115	SIG	115								
8	SIG	8		62	SIG	62		116	SIG	116								
9	SIG	9		63	SIG	63		117	SIG	117								
10	SIG	10		64	SIG	64		118	SIG	118								
11	SIG	11		65	SIG	65		119	SIG	119								
12	SIG	12		66	SIG	66		120	SIG	120								
13	SIG	13		67	SIG	67		121	SIG	121								
14	SIG	14		68	SIG	68		122	SIG	122								
15	SIG	15		69	SIG	69		123	SIG	123								
16	SIG	16		70	SIG	70		124	SIG	124								
17	SIG	17		71	SIG	71		125	SIG	125								
18	SIG	18		72	SIG	72		126	SIG	126								
19	SIG	19		73	SIG	73		127	SIG	127								
20	SIG	20		74	SIG	74		128	SIG	128								
21	SIG	21		75	SIG	75		129	SIG	129								
22	SIG	22		76	SIG	76		130	SIG	130								
23	SIG	23		77	SIG	77		131	SIG	131								
24	SIG	24		78	SIG	78		132	SIG	132								
25	SIG	25		79	SIG	79		133	SIG	133								
26	SIG	26		80	SIG	80		134	SIG	134								
27	SIG	27		81	SIG	81		135	SIG	135								
28	SIG	28		82	SIG	82		136	SIG	136								
29	SIG	29		83	SIG	83		137	SIG	137								
30	SIG	30		84	SIG	84		138	SIG	138								
31	SIG	31		85	SIG	85		139	SIG	139								
32	SIG	32		86	SIG	86		140	SIG	140								
33	SIG	33		87	SIG	87		141	SIG	141								
34	SIG	34		88	SIG	88		142	SIG	142								
35	SIG	35		89	SIG	89		143	SIG	143								
36	SIG	36		90	SIG	90		144	SIG	144								
37	SIG	37		91	SIG	91		145	SIG	145								
38	SIG	38		92	SIG	92		146	SIG	146								
39	SIG	39		93	SIG	93		147	SIG	147								
40	SIG	40		94	SIG	94		148	SIG	148								
41	SIG	41		95	SIG	95		149	SIG	149								
42	SIG	42		96	SIG	96		150	SIG	150								
43	SIG	43		97	SIG	97		151	SIG	151								
44	SIG	44		98	SIG	98		152	SIG	152								
45	SIG	45		99	SIG	99		153	SIG	153								
46	SIG	46		100	SIG	100		154	SIG	154								
47	SIG	47		101	SIG	101		155	SIG	155								
48	SIG	48		102	SIG	102		156	SIG	156								
49	SIG	49		103	SIG	103		157	SIG	157								
50	SIG	50		104	SIG	104		158	SIG	158								
51	SIG	51		105	SIG	105		159	SIG	159								
52	SIG	52		106	SIG	106		160	SIG	160								
53	SIG	53		107	SIG	107												
54	SIG	54		108	SIG	108												

PROPRIETARY NOTE

THIS DOCUMENT CONTAINS INFORMATION CONFIDENTIAL AND PROPRIETARY TO SAMTEC, INC. AND SHALL NOT BE REPRODUCED OR TRANSFERRED TO OTHER DOCUMENTS OR DISCLOSED TO OTHERS OR USED FOR ANY PURPOSE OTHER THAN THAT WHICH IT WAS OBTAINED WITHOUT THE EXPRESSED WRITTEN CONSENT OF SAMTEC, INC.

samtec
520 PARK EAST BLVD, NEW ALBANY, IN 47150
PHONE: 812-944-6733 FAX: 812-948-5047
e-Mail: info@SAMTEC.com code: 55322

SHEET SCALE: 3:4

DESCRIPTION: CUSTOM HDR CABLE ASSEMBLY

DWG. NO. HDR-131992-XX-HQDP

BY: J. BORGELT 4/6/07 SHEET 2 OF 3

F:\DWG\HDR\131000\HDR-131992-XX-HQDP\HDR-131992-XX-HQDP.SLDDRW

HDR-131992-XX-HQDP

REVISION E

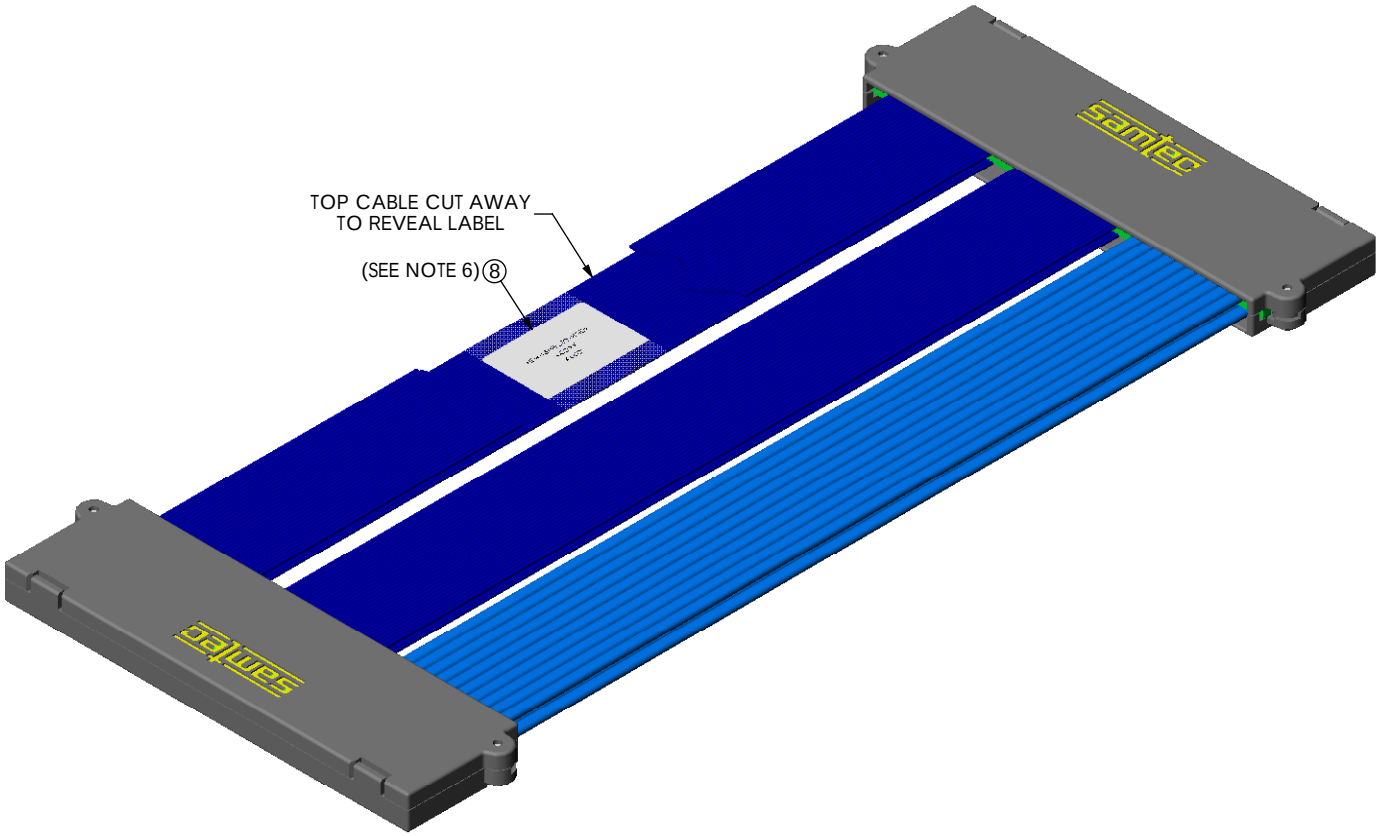

PROPRIETARY NOTE

THIS DOCUMENT CONTAINS INFORMATION CONFIDENTIAL AND PROPRIETARY TO SAMTEC, INC. AND SHALL NOT BE REPRODUCED OR TRANSFERRED TO OTHER DOCUMENTS OR DISCLOSED TO OTHERS OR USED FOR ANY PURPOSE OTHER THAN THAT WHICH IT WAS OBTAINED WITHOUT THE EXPRESSED WRITTEN CONSENT OF SAMTEC, INC.

520 PARK EAST BLVD, NEW ALBANY, IN 47150
PHONE: 812-944-6733 FAX: 812-948-5047
e-Mail: info@SAMTEC.com code: 55322

SHEET SCALE: 1:1

DESCRIPTION: CUSTOM HDR CABLE ASSEMBLY

DWG. NO. HDR-131992-XX-HQDP

BY: J. BORGELT 4/6/07

F:\DWG\HDR\131000\HDR-131992-XX-HQDP\HDR-131992-XX-HQDP.SLDDRW